COBOTS:
A NOVEL MATERIAL HANDLING TECHNOLOGY

Witaya Wannasuphoprasit[1] **Prasad Akella[2]**

Michael Peshkin[1] **J. Edward Colgate[1]**

[1] Dept. of Mechanical Engineering, Northwestern University, Evanston, IL 60208
[2] General Motors Corporation, Manufacturing Center, M/C: 480-109-163, Warren, MI 48090-9040

ABSTRACT

Cobots are a class of hybrid human-controlled/computer-controlled material handling device, which can enhance ergonomics, productivity, and safety. Cobots implement software-defined *virtual guiding surfaces*, as well as providing some amplification of human power ("power assist"). Cobots make use of steerable nonholonomic joints to produce the guiding surfaces that aid the operator. This unique steering system, in place of powerful actuators, results in guiding surfaces that are smooth, frictionless, and intrinsically stable -- making cobots particularly appropriate for safety-critical tasks.

In this paper we describe the basic concepts of cobots with reference to laboratory prototypes having two or three workspace dimensions. Early industrial application in automobile final assembly plants is underway, and two cobots presently in industrial environments are described

MOTIVATION

The *General Assembly* area of automobile plants, currently relies on conventional material handling devices often called "assist devices", examples of which are hoists and articulating arms with pneumatic balancers. These primarily provide gravity compensation. As the industry moves towards larger modular sub-systems (e.g., a 150-lb. cockpit system), cumulative trauma disorders resulting from maneuvering them have become greater concerns. One application of cobots, highlighted in this paper, is a solution to the so-called "*inertia management*" problem which arises frequently in the materials handling industry in general, and in automobile final assembly in particular. Moving heavy payloads, even with lift assistance, can nevertheless cause ergonomic stress due to problems associated with inertia management -- changes of direction and speed -- as well as overcoming friction.

One solution involves the use of virtual guiding surfaces, which may be implemented by cobots. The guiding surfaces may include, for example, a "virtual funnel" that directs workpart motion towards a specific task location. Since the virtual surfaces, implemented by a cobot, produce the large forces necessary to redirect the motion of a payload, smaller handling forces are required from the human operator. It is worth noting that full automation of vehicle final assembly is not considered desirable, because of the many unique capabilities brought by human workers. However guiding surfaces can reduce inertia management stresses, while cobot power-assist can help the operator overcome friction and start-up inertia.

In addition to allowing the use of smaller handling forces, cobots help improve quality by decreasing human error, especially errors that result in collisions and workpart damage. Productivity can be improved by reducing the training period required by new operators in learning the sometimes-complex motion trajectories required. Further the speed at which an operator can execute a trajectory can be increased if he or she is following a virtual wall, rather than providing directional forces manually. Finally, great manufacturing flexibility is made possible by being able to accommodate under software control, to several body styles being built on a single line.

We describe, in this paper, two categories of cobot: wheel based cobots, and spherical joint based cobots. The first category uses a rolling wheel as a cobot joint, and mainly operates on a floor. The second group employs a spherical joint to form articulated, revolute joint, or overhead rail cobots. While we will briefly discuss spherical joint cobots, our focus here is on wheel based cobots.

The simplest possible cobot is a human powered unicycle, which is steered by a servo system acting under computer control. The unicycle cobot has a two dimensional configuration space (*x-y* in plane). This laboratory prototype

Cobots: A Novel Material Handling Technology

W. Wannasuphoprasit, P. Akella, M. Peshkin, J. E.Colgate

Proceedings of IMECE 1998

will be used to explain some basic cobot concepts. A tricycle cobot, nicknamed Scooter, has been built to explore kinematics and controls of higher configuration space cobots, and this will be described briefly as well

The paper also describes in some detail two industrial prototypes that have been built to date: a floor based cobot and a power assisted overhead rail cobot. These are currently being evaluated at General Motors and Ford Motor Company respectively.

WHEEL BASED COBOTS

Unicycle Cobot

We first describe the simplest device, the Unicycle cobot shown in Fig. 1. The cobot mechanism consists of a free-rolling wheel in contact with a working surface. A small motor steers the wheel, but cannot cause the cobot to move. The wheel's rolling velocity is monitored by an encoder, but it is not driven by a motor. Only the operator can cause it to move, by applying forces to the handle. A force sensor monitors these user forces.

The unicycle cobot has a two-dimensional (planar, $R = [x, y]^T$) configuration space corresponding to all possible locations of the unicycle assembly in its planar workspace. Although the Unicycle has only one degree-of-freedom (DOF), it may, by proper steering, reach any point on the plane. Such is the nature of nonholonomic constraint. In operation, however, virtual constraint surfaces may be defined in software to prohibit entry into excluded regions of the plane.

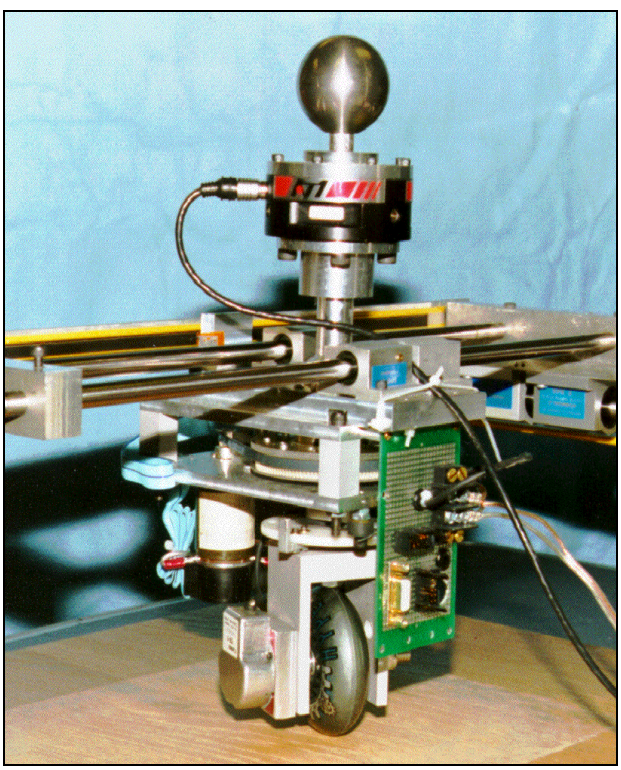

Figure 1. The Unicycle cobot

The Unicycle cobot displays two essential behaviors: **virtual caster**, and **virtual wall**.

Virtual caster mode is invoked when the cobot's position in its planar workspace is away from all defined constraint surfaces. The cobot should therefore permit any motion that the user attempts to impart. To do this, the steering angle of the wheel is servo-controlled such that user forces perpendicular to the wheel's rolling direction are nulled. The behavior is similar to that of a caster wheel on a rolling item of furniture, though there is no physical caster at all.

When the user brings the cobot's position in the plane to a place where a constraint surface is defined, control of the steering angle changes over to virtual wall mode. The wheel is steered such that its rolling direction becomes tangent to the constraint surface, and this tangency is maintained as the user moves the cobot in "virtual contact" with the constraint surface. The user perceives contact with a hard frictionless constraint surface. In practice the illusion is convincing. The virtual wall mode is ended when the measured user forces are found to be directed away from the constraint surface, at which point virtual caster mode resumes. A detailed discussion of virtual caster and virtual wall control can be found in (Wannasuphoprasit, et al., 1997).

Figure 2 depicts an example path. In the region where x is greater than 4, the unicycle cobot exhibits virtual caster mode. The cobot steers according the force input form the operator. When the operator moves the cobot across the predefined virtual wall (at x = 4), control switches to virtual wall mode and steers the cobot tangent to the virtual wall.

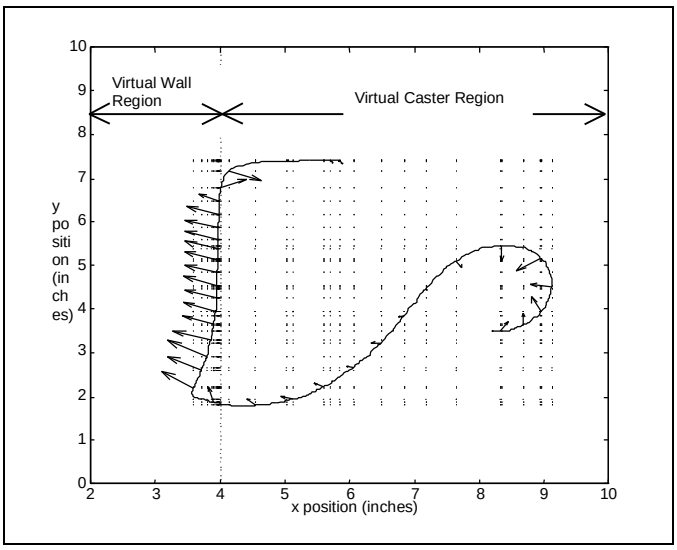

Figure 2. Trajectory and applied forces for a unicycle cobot

Bicycle Cobot

The Unicycle cobot has a two-dimensional workspace (x-y). In planar motion a full three-dimensional workspace is possible, involving orientation as well. An imagined bicycle

cobot, illustrated in Fig. 3, could implement *x*, *y*, and angular constraint. This machine consists of two independently steerable wheels whose shafts are held a fixed distance from one another. Although it has a larger configuration space than the Unicycle, the bicycle has the same number of degrees of freedom: just one; any motion of the bicycle can be described as a rotation about a center-of-rotation (COR), specified by the point of intersection of the two wheel axes. However the location of this COR can be changed in real time by steering. It is true of cobots in general that there is one *mechanical* degree of freedom, but that the corresponding direction is servo controlled by "steering" (with an appropriately broad definition of "steering").

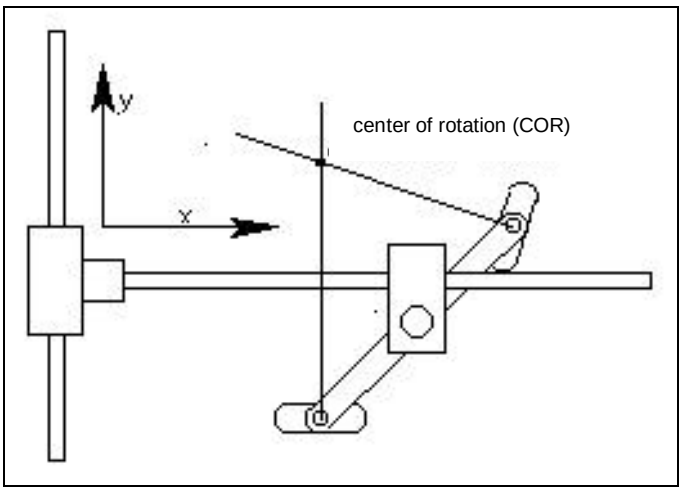

Figure 3. Bicycle Cobot

In the Bicycle example we can begin to see that, like other robotic mechanisms, cobots exhibit singularities. In the case of the bicycle, it is not possible to specify a center of rotation on the line that passes through the two wheel shafts. If we attempt to do so, the two wheels will both be aimed perpendicular to this line. In this configuration, the machine actually gains a degree of freedom, going from one to two (of course, we usually think of singularities as reducing the DOF).

One way to solve this problem is to add a third wheel whose shaft is not collinear with the other two.

Scooter: A Tricycle Cobot

Scooter, a redundant tricycle cobot, is pictured in Fig. 4. Scooter has been built primarily as a testbed for exploring the kinematics and control of higher dimensional cobots. The configuration space of Scooter is that of a planar rigid body ($R = [x, y, lq]^T$). Only two wheels are needed to produce one degree-of-freedom motion in this space; however, Scooter is outfitted with a third wheel to eliminate the need for external support, and to eliminate the singularity described above (Colgate, et al., 1996b).

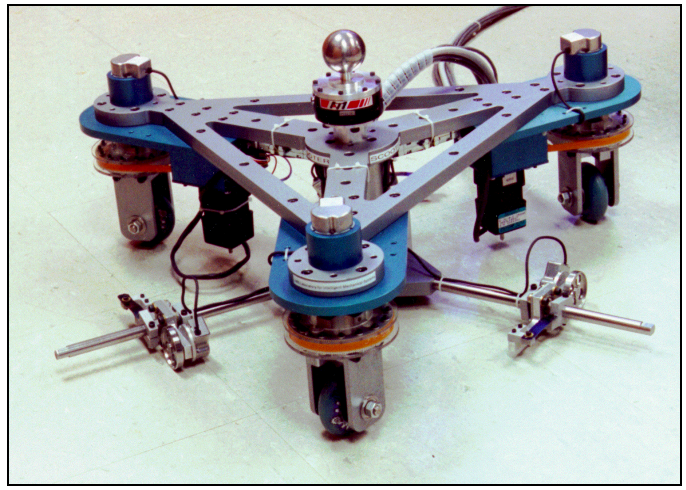

Figure 4. Scooter

Scooter consists of three wheel units. Each wheel unit is equipped with a wheel, a servo system to steer it (but not to drive it), and an encoder to measure its steering angle. The servo system steers the wheel but does not cause the wheel to roll. The wheel units are connected by a triangular platform, Scooter's "body". The operator's handle and a force sensor to measure the operator's desired direction of motion are located on the top at the center on the platform. In practice, continuous rotation and fast steering response of the wheel joints are essential. Unlike the Unicycle, we did not include rolling-speed sensors on the wheels. Rather we used three small planimeter wheels from which we can infer Scooter's three rolling speeds. The planimeter wheels are also used for odometry, and so over time a positioning error gradually accumulates.

Even though the Unicycle cobot and Scooter are conceptually similar, the control of the scooter is quite complicated. In operation, the steering of the three wheels is coordinated so that all three axes intersect at a point. Without this agreement the cobot would be immobile. Since all paths and virtual walls are planned in the configuration space ($[x, y, lq]^T$), the controller requires kinematic transformations from configuration space to joint space. The details of the kinematic transformations and control are fully addressed in (Wannasuphoprasit, et al., 1997).

Scooter displays two mode of operations: virtual caster and path tracking (virtual wall is basically software switching between these two modes). Figure 5 displays an example path (in this case a helix path). The solid line is the path commanded by the controller. Each data represents the center position (x, y) and orientation (z) of the scooter. As shown as the dot line, Scooter tracked the path very well.

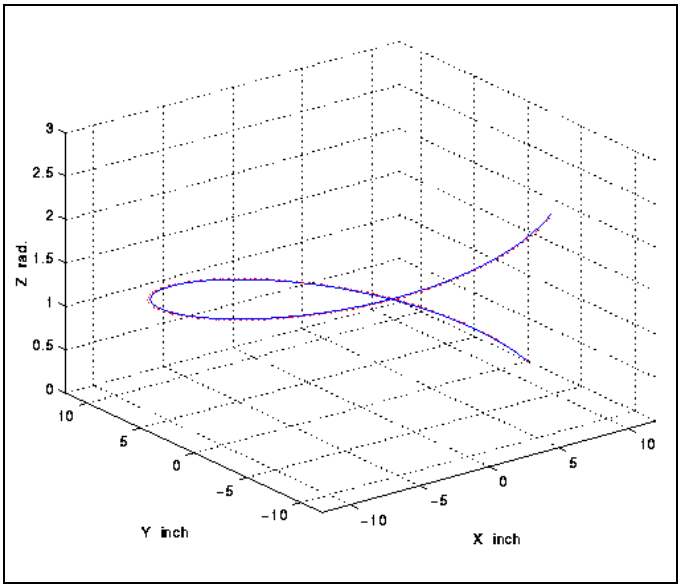

Figure 5. The solid line is a commanded helix path. The dot line demonstrates the actual scooter's tracking path.

In practice, Scooter comfortably interacts with a human operator with a speed up to 2 m/s. The payload can be up to 200 lbs. Virtual wall control makes the scooter very responsive and easy to maneuver. Virtual walls produced by the scooter are extremely smooth and realistic.

Industrial Prototypes: A Cobotic Door Unloader For An Automobile Assembly Line

In collaboration General Motors and Northwestern University built and tested a proof-of-concept floor-based cobot, which is now in a process validation laboratory at GM's Tech Center in Warren, MI. Our application was the "doors-off[1]" task in which the vehicle's doors are removed from the empty auto body, just after painting and prior to assembly. Manually or with conventional assist devices, the task is problematic due to tight tolerances, highly curved body surfaces, and the need for a vehicle-specific "escape trajectory" to avoid damage. The task requires rotational motion as well as translation, and also involves issues of locating the unloader with respect to an imprecisely situated car and working with a moving line.

[1]Automobiles are typically assembled in three phases: Body shop where the sheet metal is welded, Paint shop where it is painted and General assembly where all sub-systems are mated with the painted shell. To maximize paint quality, the shell of the car is loosely integrate at the end of the body shop and sent in to be painted simultaneously. However, in order to improve production efficiencies (by keeping assembly costs down and by permitting workers access through the entire door opening), doors are taken off the car as soon as it exits the paint shop and enters general assembly. This process for removing the door is called the "doors-off" process. It is one of many steps in the "General Assembly Bill of Process."

Figure 6. The cobot door unloader (courtesy of General Motors Company).

The door unloader (see Fig. 6) consists of a "cobot" module to control motion across the plant floor and a task-specific "tooling" module to grasp and lift the door. The cobot module is a ruggedized Scooter. However the operator's interface to the cobot, by which his or her motion-intention is made known to the controller, is no longer a force sensor as it was on Scooter. In this application we have used a freely turnable revolute handle whose angle is read by a RVDT. The controller reads the operator's intent expressed via the handle angle, and may modify its motion based on this input, or ignore it, depending on mode.

The vehicle locating system consists of two roller/sliders, which measures the relative geometry (distance, orientation and velocity) between the door unloader and the vehicle as the door is being lifted off. With this information the cobot can position itself relative to the car. The location system plays a significant role in ensuring that the door hinge pins lift off cleanly.

The "tooling" module is designed to lift the door off of its two hinges while ensuring that the door is securely held by the gripper.

The cobot's tasks are to

- Direct the operator towards the vehicle and later to the door drop-off station, maintaining with the proper orientation for each
- Assume the correct orientation and lateral distance with respect to the vehicle to permit the lifting off of the door.
- Perform direction changes at the operator's command while mitigating the apparent inertia of the door unloader.

The task cycle (see Fig. 7) is a fairly simple one. The operator starts from the home position (typically line-side) with the cobot in caster mode. The operator steers the device towards the vehicle, while the cobot automatically orients[2] itself with respect to the car via a *gross approach path.* Once

[2] The relative orientation between the door unloader and the vehicle is optimized to ensure that the door does not hit any "Class A" surface on the front fender during the operation. In the test vehicle that we were using, the desired angle was 63°.

the vehicle sensing system engages the side of the car, the unloader switches to *fine approach path mode,* adjusting its orientation to match that of the particular vehicle. It also controls the offset distance between the vehicle and the unloader. The operator pushes a button to grasp the door and another to lift it. Upon door lift-off the velocities of the unloader and the vehicle become independent. The system triggers on this signal to execute an *escape path* that guides the door away from the vehicle as quickly and safely as possible. The operator now regains control of the unloader and steers it in virtual caster mode towards the drop off station. The unloader orients itself with respect to the drop off station as it approaches. When the vehicle sensing system engages, the unloader executes a *fine return path* that tunes its orientation and position for dropping off the door. The operator transfers the door to the door trim line and is then ready to repeat the cycle.

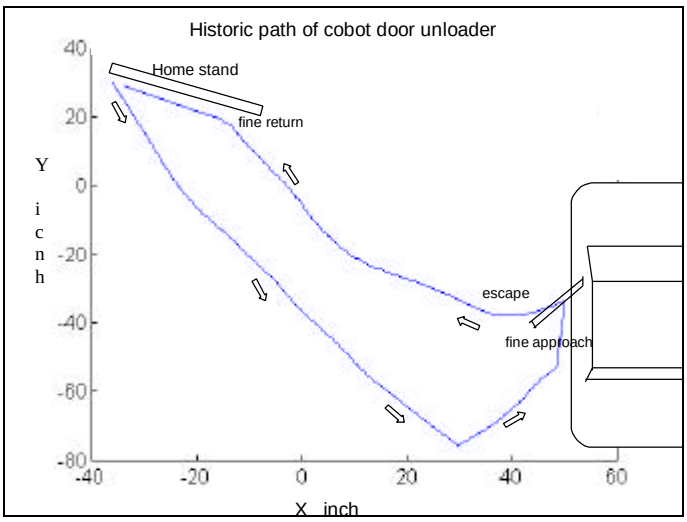

Figure 7. A typical trajectory followed by the cobotic door unloader. For purposes of visualization, the vehicle and the home stand part of the drop off station are also shown (though, not to scale).

The door unloader uses dead-reckoning (based on the rotation of the wheels) to calculate its position at any instant of time. This method is susceptible to accumulated errors. To overcome this problem we exploited the fact that the device has a fixed point during every cycle -- at the drop off station. Thus, as the door is being transferred to the door trim line the device is 'zeroed' out. Figure 7 shows a typical path followed by the operator during a cycle.

One motivation was inertia management -- handling motions so that the apparent inertia that the operator feels is minimized. Despite the design team's concern about a loaded mass was in excess of 136 kg, most operators reported finding the door unloader to be very easy to maneuver -- startup force was typically less than 25N (5 pounds). Low rolling friction contributes to this good result, and equally importantly the cobot does not "waste" momentum – changes of direction are handled by steering rather than braking. The operator, consequently, does not have to supply acceleration and deceleration forces that commonly cause fatigue.

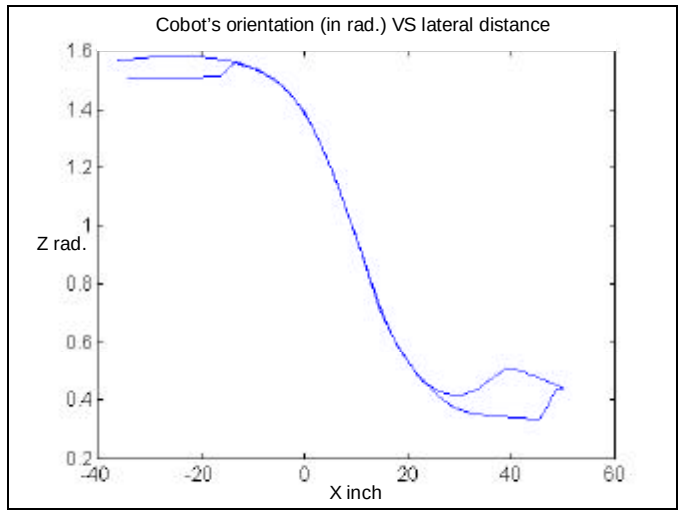

Figure 8. The orientation trajectory corresponding to the (x,y) trajectory shown in Figure 7.

Preliminary tests indicate that the prototype door unloader promises significant improvements in (1) **ergonomics**, by minimizing the operator's twisting and lateral forces; (2) **productivity**, by decreasing the time to master the use of the device and by reducing cycle time; (3) **quality,** by reducing the scope for human error; and (4) **safety,** because of the passivity of the cobot. Efforts to quantify these improvements are on-going.

SPHERICAL JOINT COBOTS

All the cobots presented above are wheel based cobots, which must operate on a planar working surface. In this section, we briefly introduce the other cobot element, a spherical joint. The spherical joints are used in place of steerable wheels for cobots with revolute joints, such as articulated cobots. However our first application has been to an industrial x-y overhead rail cobot, which uses two spherical joints. For a discussion of other applications of the spherical joint, and more details, please see Peshkin et al. (1996, 1998).

Spherical Joint

The servo-steered wheel above can be thought of as a *CVT* (*Continuous Variable Transmission*): it wheel controls the ratio of velocities in *x* and *y* axis. The transmission ratio between V_x and V_y of the wheel's steering shaft depends on the steering angle, α. This ratio can be adjusted without limit by steering the wheel. This relationship may be written as $V_y/V_x = \tan(\alpha)$. The wheel may thus be considered to be a *translational CVT*: it constrains the ratio of two translational velocities

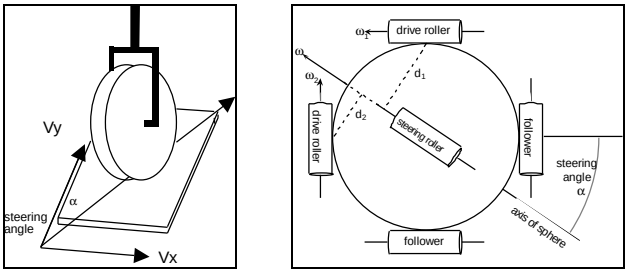

Figure 9. Analogy between wheel and spherical joints.

Cobots with revolute joints require a transmission element analogous to the wheel, but one that couples two *angular* velocities. Peshkin et al. (1996) has introduced a cobotic spherical joint known as a *rotational CVT* for cobots. As shown in Fig 9., the spherical joint has six rollers preloaded around a sphere. (In practice, only four rollers are used (Peshkin et al., 1996). Two of them, the **drive rollers,** are connected to the revolute whose angular velocities are to be related. Two **follower rollers** are used only to confine and preload the sphere (and are absent in the four roller design). On the top and the bottom of the sphere are two **steering rollers**. These two rollers are mechanically connected together (not shown in the picture), so that both of them are at all times steered to the same angle.

Rolling contact constraints enforce that the sphere's axis of rotation must be in the same plane of roller axes. The drive and follower rollers form a common plane (parallel to the paper), and the steering rollers form the other plane (normal to the paper). The sphere's axis of rotation (shown in Fig. 9) is the line where these two planes intersect. From geometry, one may find $w_2 / w_1 = d_2 / d_1$, or $w_2 / w_1 = \tan(a)$.

Overhead Rail Cobot

We have built an **overhead rail cobot** comprised of two rotational CVTs. It has a two two-dimensional (*x-y*) workspace. The CVTs are mounted on a carriage, which is attached to an industrial rail system (Fig. 10 and 11). One drive roller from each CVT is connected to a pulley, which have angular velocity w_1, and w_2 respectively. The other drive rollers of each CVTs are connected together by a short belt, which can be driven by a 200 watt *power assist* motor. As shown in Fig. 10, w_1 and w_2 are coupled together by timing belts. The translational velocities V_x and V_y can be written as: $V_x = w_1 - w_2$, and $V_y = w_1 + w_2$.

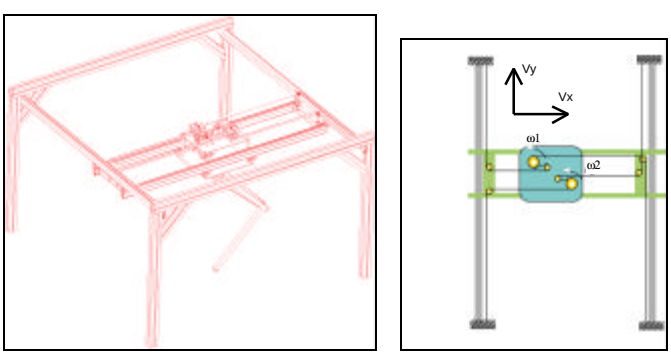

Figure 10. Overhead rail cobot

Unlike Scooter, this cobot can add provide some energy to the motion of the payload. The purpose of this "power assist" is to overcome friction in the timing belt mechanism. Moreover the power assist also makes the 400-lb load significantly easier to move.

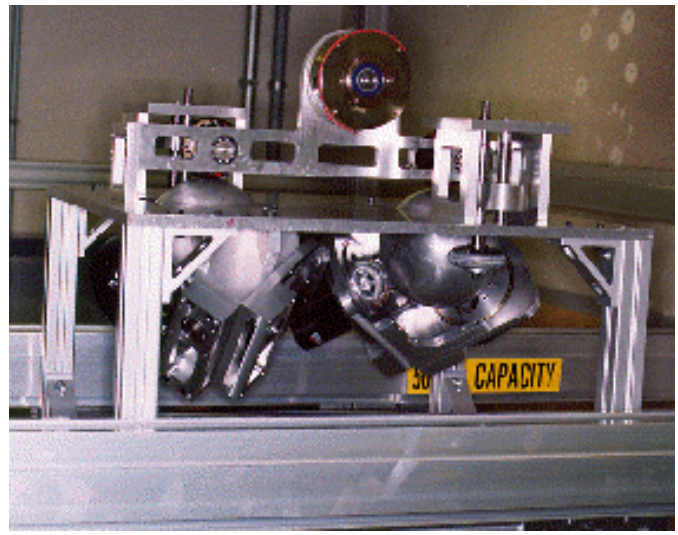

Figure 11. CVT mechanism of the overhead rail cobot (courtesy of Ford Motor Company).

This powered rail cobot is presently at Ford Motor AMTD. It has demonstrated significant improvement over a regular servo system. For example, it would required a 2,900 watt motor to move this payload with 2m/s speed in a circle path of 50 cm radius. Further details of the overhead rail cobot and other higher configuration space cobots are available in (Peshkin et al., 1998).

CONCLUSIONS

Cobots can display and enforce virtual surfaces in space. In manufacturing and materials handling environments, virtual surfaces can improve productivity and quality, while reducing ergonomic strain. We have described the cobot concept and mechanism briefly, and described some results from early applications of cobots in automotive assembly.

ACKNOWLEDGEMENTS

The authors greatly acknowledge the support of the General Motors Foundation and the National Science Foundation. We are grateful for the support and vision of Steve Holland, Jim Wells, Steve St. Angelo, Nagesh Nidamaluri, Randy Sobocienski, Randy Rennpage, Dan Larabell, and Tom Rushman of the General Motors Company. We also gratefully acknowledge Brian Daugherty and Tom Pearson of Ford Motor Company.

REFERENCES

Colgate, J. E., Peshkin, M. A. and Wannasuphoprasit, W., 1996, "Nonholonomic Haptic Display," *IEEE International Conference on Robotics and Automation*, Minneapolis, Vol. 1, pp. 539-544.

Colgate, J. E., W. Wannasuphoprasit and M. A. Peshkin. *Cobots: Robots for Collaboration with Human Operators.* International Mechanical Engineering Congress and Exposition. Atlanta. pp. 433-440, ASME, 1996.

Peshkin, M., Colgate, J. E. and Moore, C., 1996, "Constraint Machines Based on Continuously Variable Transmissions, for Haptic Interaction with People," *IEEE International Conference on Robotics and Automation*, Minneapolis, Vol. 1, pp. 551-556.

Peshkin, M., Colgate, J. E., Akella, P., Wannasuphoprasit, W., Gillespie B., Mills A, Moore, C., Santos-Munne, J., Burns, D., Lorenz A., "Cobot Architechture," Submitted to *IEEE Transactions on Robotics and Automation.*

Wannasuphoprasit, W., Gillespie, R. Brent, Colgate, J. E., and Peshkin, M. A. 1997, "Cobot Control," *IEEE International Conference on Robotics and Automation*, Albuquerque, Vol. 4, pp. 3571-3576.