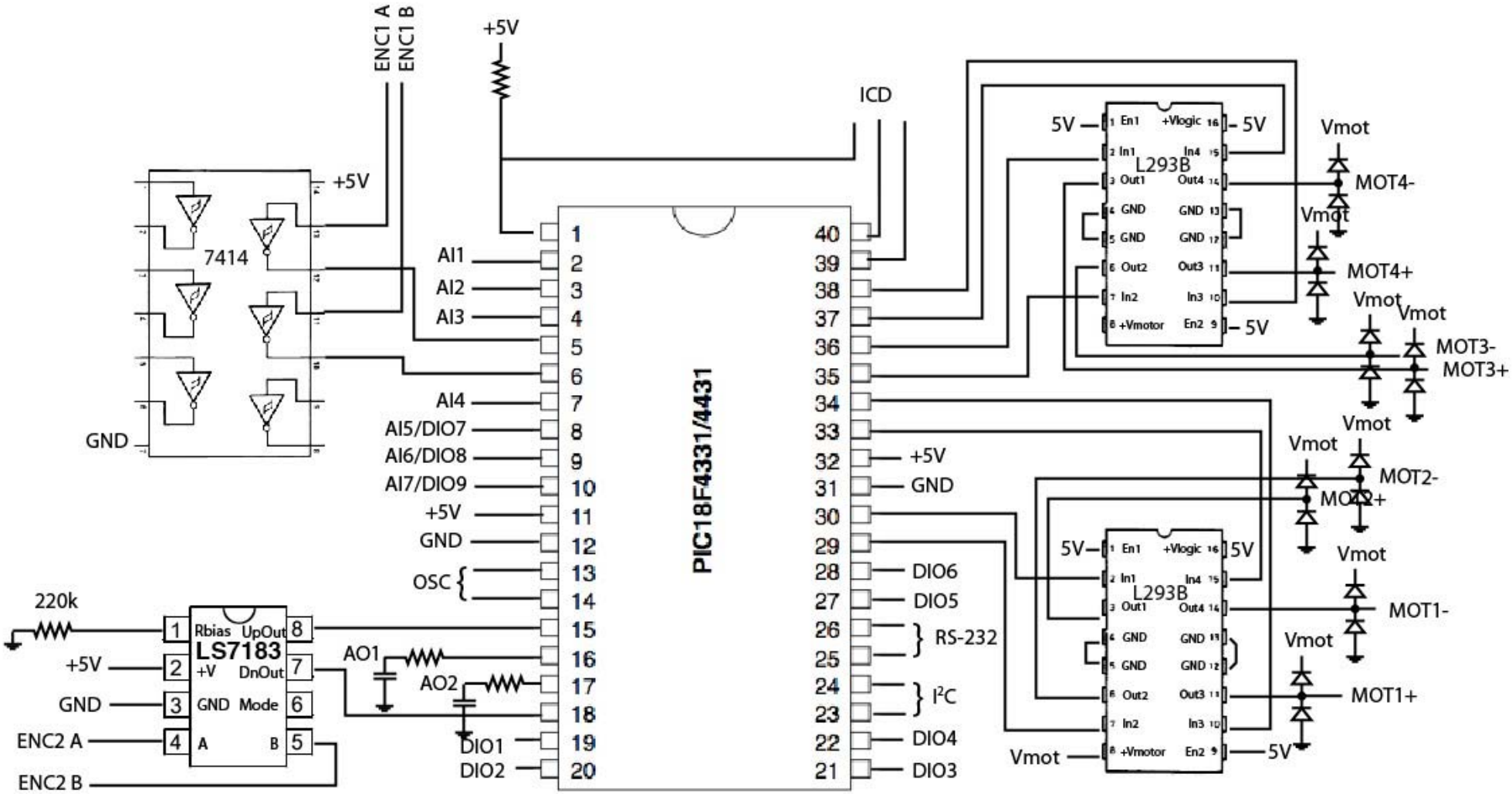

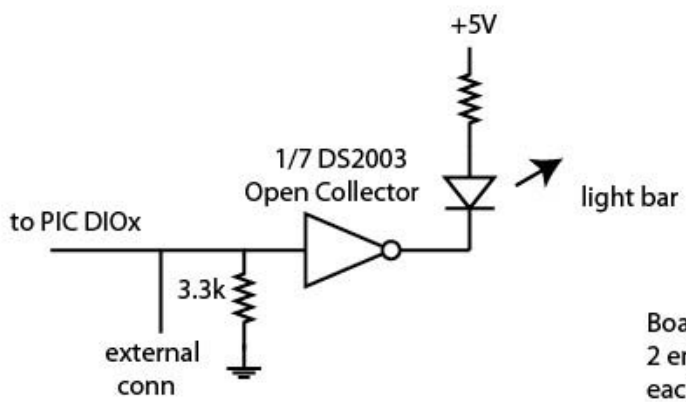

Not shown: bypass caps for chips, 7805 voltage regulator, large cap for 5V, RS-232 line driver, power switch and LED indicator, oscillator circuit.

Board connections: Battery pack, +5V out, DIO, Analog in, Analog out, RS-232, I²C, 2 encoders, 3 lines for ICD programmer. May want 1 +5V and 1 ground line available for each DIO and analog I/O if we want to make 1 standard connector (a la Handyboard).

PICs are cheap and replaceable and do not have to be protected. External devices may have to be protected from PIC (e.g., encoders, which are protected). Could modify to protect DIO.